Cambridge International AS & A Level

Cambridge Assessment International Education
Cambridge International Advanced Subsidiary and Advanced Level

CANDIDATE NAME

CENTRE NUMBER

CANDIDATE NUMBER

6816645445

PHYSICS **9702/33**

Paper 3 Advanced Practical Skills **February/March 2019**

2 hours

Candidates answer on the Question Paper.

Additional Materials: As listed in the Confidential Instructions.

READ THESE INSTRUCTIONS FIRST

Write your centre number, candidate number and name on all the work you hand in.
Write in dark blue or black pen.
You may use an HB pencil for any diagrams or graphs.
Do not use staples, paper clips, glue or correction fluid.
DO **NOT** WRITE IN ANY BARCODES.

Answer **both** questions.
You will be allowed to work with the apparatus for a maximum of one hour for each question.
You are expected to record all your observations as soon as these observations are made, and to plan the presentation of the records so that it is not necessary to make a fair copy of them.
You are reminded of the need for good English and clear presentation in your answers.

Electronic calculators may be used.
You may lose marks if you do not show your working or if you do not use appropriate units.

Additional answer paper and graph paper should be used only if it becomes necessary to do so.

At the end of the examination, fasten all your work securely together.
The number of marks is given in brackets [ ] at the end of each question or part question.

For Examiner's Use	
1	
2	
Total	

This document consists of **10** printed pages and **2** blank pages.

© UCLES 2019

Cambridge Assessment International Education

BLANK PAGE

© UCLES 2019

You may not need to use all of the materials provided.

1 In this experiment, you will investigate a pendulum with a mass fixed at each end.

(a) • Assemble the apparatus with the nail passing through the third hole from C, as shown in Fig. 1.1.

• Ensure that the nail is held securely in the clamp.

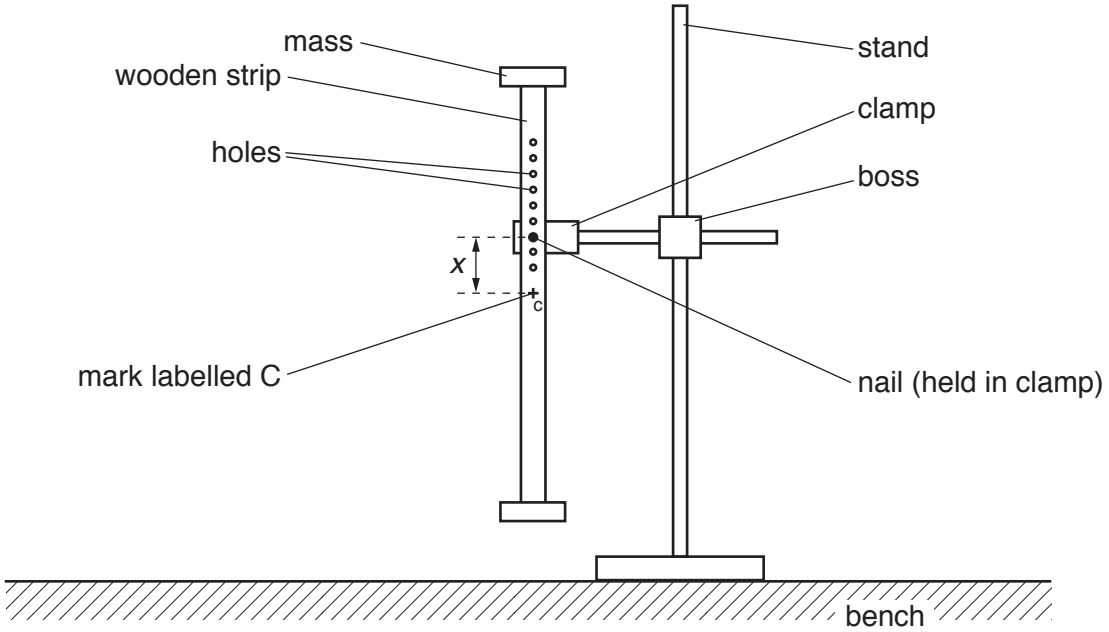

Fig. 1.1

• The distance between the nail and C is *x*, as shown in Fig. 1.1.
Measure and record *x*.

x = ... cm [1]

(b) • Push the bottom of the strip horizontally through a distance of approximately 5 cm. Release the strip so that it oscillates.

• Determine the period *T* of these oscillations.

T = ... s [2]

© UCLES 2019

(c) Change x by positioning the nail in a different hole and repeat **(b)**. Repeat until you have six sets of values of x and T.

Record your results in a table. Include values of $\frac{1}{x}$ and T^2 in your table.

[9]

(d) **(i)** Plot a graph of T^2 on the y-axis against $\frac{1}{x}$ on the x-axis. [3]

(ii) Draw the straight line of best fit. [1]

(iii) Determine the gradient and y-intercept of this line.

gradient = ...

y-intercept = ...

[2]

© UCLES 2019

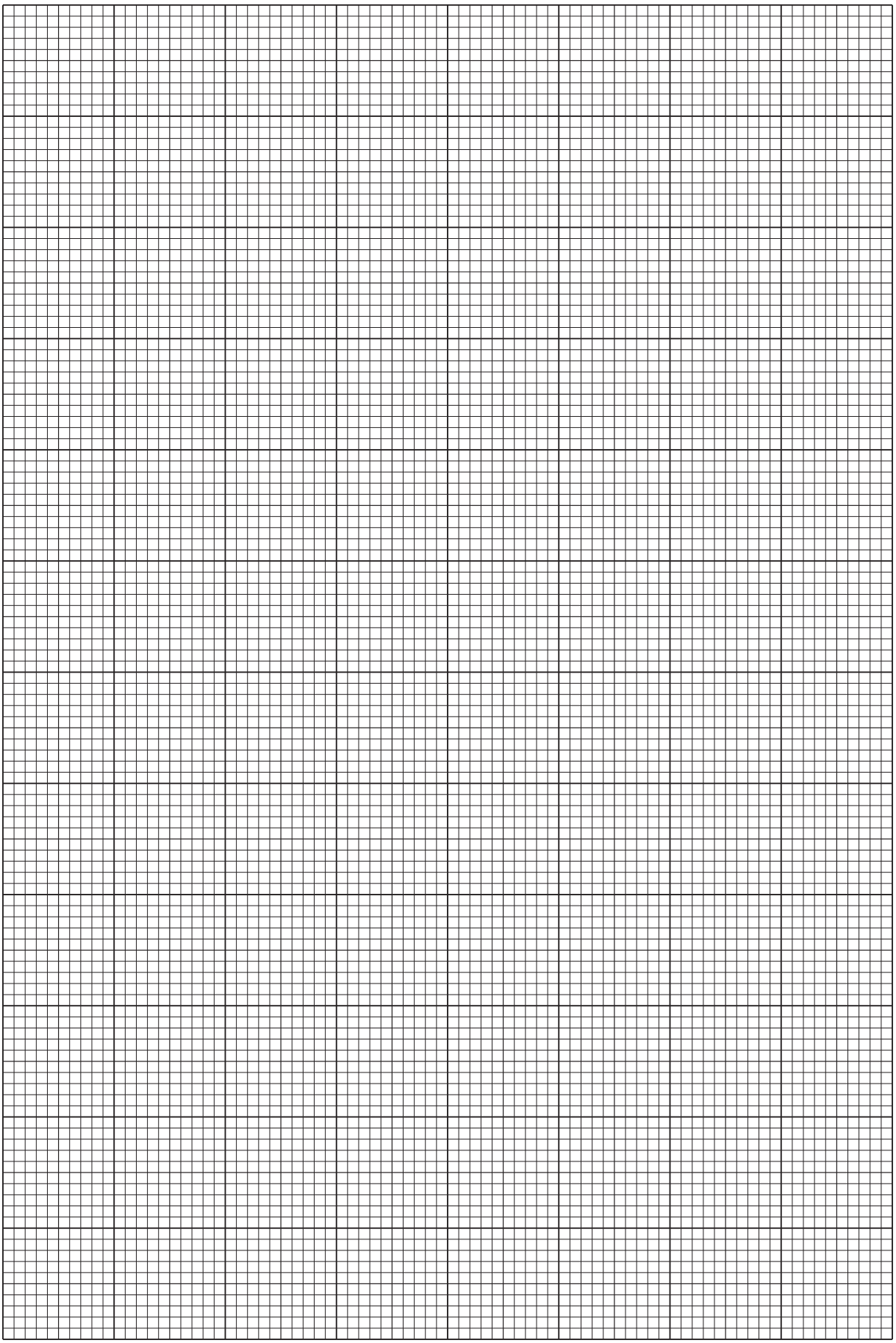

© UCLES 2019

(e) It is suggested that the quantities T and x are related by the equation

$$T^2 = \frac{a}{x} + b$$

where a and b are constants.

Use your answers in **(d)(iii)** to determine the values of a and b.
Give appropriate units.

a = ...

b = ...
[2]

[Total: 20]

© UCLES 2019

You may not need to use all of the materials provided.

2 In this experiment, you will investigate the relationship between the pressure in a balloon and its diameter.

(a) • You are provided with two partially inflated balloons. Place the larger balloon on the bench with its neck at the side, as shown in Fig. 2.1.

• Put pieces of modelling clay around the balloon to stop it rolling, as shown in Fig. 2.1.

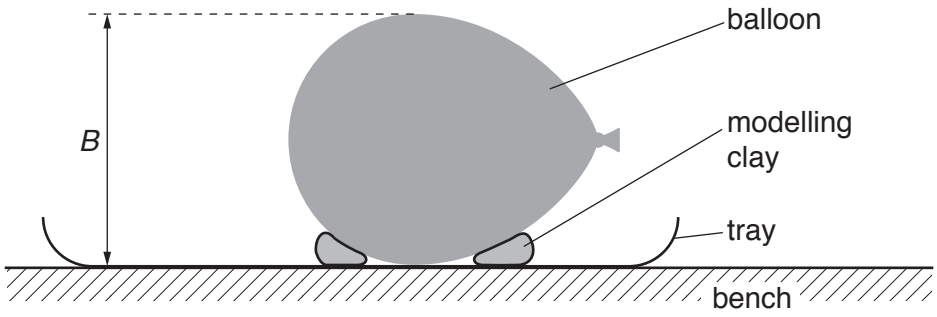

Fig. 2.1

• The diameter of the balloon is *B*, as shown in Fig. 2.1.
Measure and record *B*.

B = ... [1]

(b) • Wet a small area on the top of the balloon with a damp paper towel.

• Balance the transparent block on the top of the balloon, as shown viewed from above in Fig. 2.2.

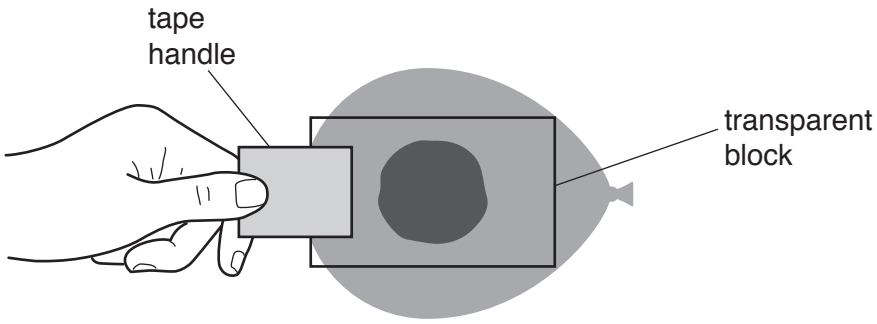

Fig. 2.2

• The contact patch will be visible, as shown in Fig. 2.3.

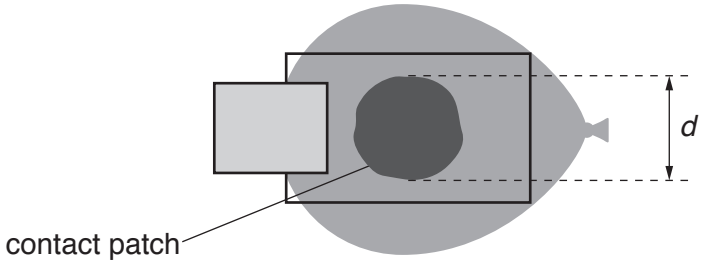

Fig. 2.3

• The diameter of the contact patch is *d*, as shown in Fig. 2.3.
Measure and record *d*.

d = ... [2]

(c) Estimate the percentage uncertainty in your value of *d*.

percentage uncertainty = ... [1]

© UCLES 2019

(d) Calculate the pressure P in the balloon using the relationship

$$P = \frac{4mg}{\pi d^2}$$

where $g = 9.81\,\text{N kg}^{-1}$ and m is the mass of the transparent block written on the card.

$P =$ ..... Nm^{-2} [2]

(e) Justify the number of significant figures you have given for your value of P.

.....

.....

.....
[1]

(f) Repeat **(a)**, **(b)** and **(d)** using the smaller partially inflated balloon.

$B =$ .....

$d =$ .....

$P =$ ..... Nm^{-2}
[3]

(g) It is suggested that the relationship between B and P is

$$P = \frac{k}{B}$$

where k is a constant.

(i) Using your data, calculate two values of k.

first value of k = ...

second value of k = ...

[1]

(ii) Explain whether your results support the suggested relationship.

.....

.....

.....

[1]

(h) (i) Describe four sources of uncertainty or limitations of the procedure for this experiment.

1. .....

.....

2. .....

.....

3. .....

.....

4. .....

.....

[4]

(ii) Describe four improvements that could be made to this experiment. You may suggest the use of other apparatus or different procedures.

1. .....

.....

2. .....

.....

3. .....

.....

4. .....

.....

[4]

[Total: 20]

© UCLES 2019

BLANK PAGE

Permission to reproduce items where third-party owned material protected by copyright is included has been sought and cleared where possible. Every reasonable effort has been made by the publisher (UCLES) to trace copyright holders, but if any items requiring clearance have unwittingly been included, the publisher will be pleased to make amends at the earliest possible opportunity.

To avoid the issue of disclosure of answer-related information to candidates, all copyright acknowledgements are reproduced online in the Cambridge Assessment International Education Copyright Acknowledgements Booklet. This is produced for each series of examinations and is freely available to download at www.cambridgeinternational.org after the live examination series.

Cambridge Assessment International Education is part of the Cambridge Assessment Group. Cambridge Assessment is the brand name of the University of Cambridge Local Examinations Syndicate (UCLES), which itself is a department of the University of Cambridge.

© UCLES 2019